# PRODUCT SPECIFICATION SHEET

*UFO Apollo LED Display Lighting System*

Rev. C16

The UFO Apollo is a contemporary LED lighting system which has been specially designed for use where unobtrusive but powerful and controllable lighting is required for display illumination. The Apollo is available in two configurations - a gantry or a linear wand.

The Apollo's main body is a discrete 12mm diameter with the option of adding a removable cowl for anti-glare. The cowl can also be used to focus the light spread. This system includes a lockable rotation feature for directional control of the light. The linear wand option, which features an inbuilt magnetic mounting system, makes positioning of the system effortless.

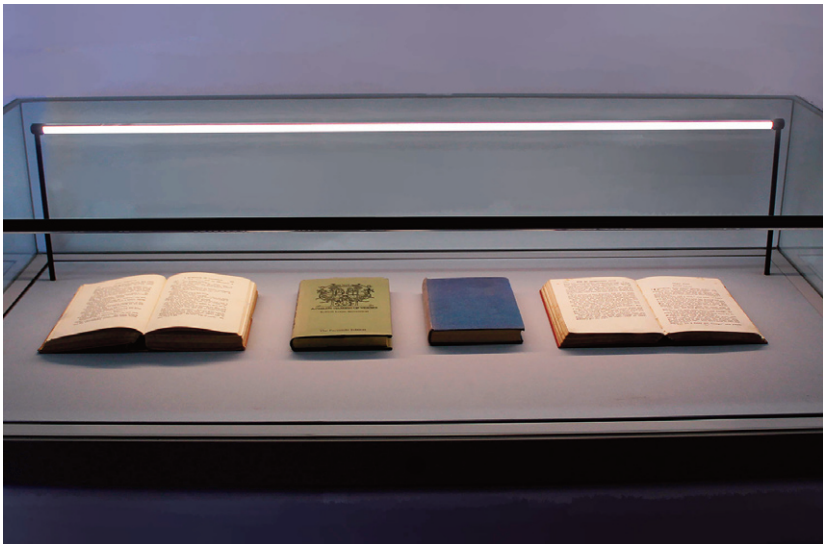

c UL US LISTED E360312

# PRODUCT SPECIFICATION SHEET

*Apollo - Gantry System*

The UFO Apollo Gantry features a discrete 12mm diameter main body and is fitted with two 8mm diameter legs.

We offer a removable cowl accessory which can be attached by simply clipping around the Apollo' main body. The cowl offers anti-glare and can also be used to provide extra focus over the light. This system can also be rotated and locked in place to give directional control of the light.

There are three mounting options with the gantry system; surface mount feet, back nut or plug & play. The surface mount feet are simply screwed into place, whilst the back nut system is great for concealing the mounting method beneath the mounting surface. Plug & play can be used for ease of install and removal.

The standard height available is 250mm, however this can be varied to order up to a maximum of 500mm.

A full range of standard lengths are available to specify - please see the table on page 5 for full details.

Customised lengths in excess of standard maximum lengths are available up to 3m subject to design. Longer gantry lengths will necessitate additional supporting legs.

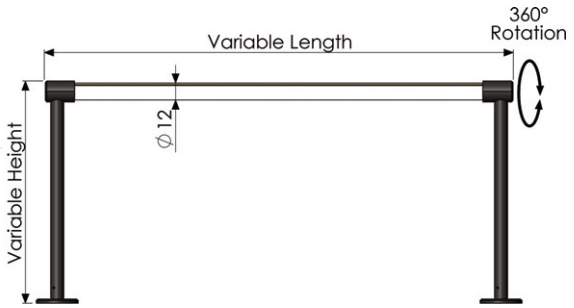


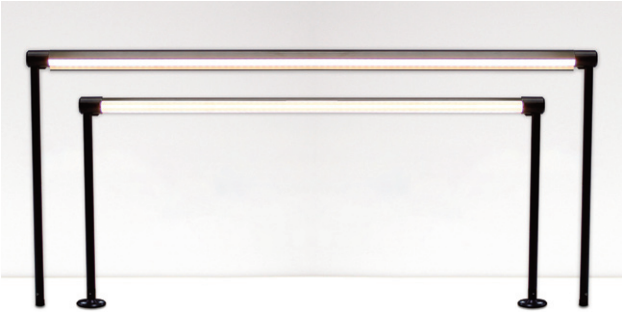

## TECHNICAL INFORMATION

| | |
|---|---|
| Color Temperatures | 2700K, 3000K, 4000K fixed or 2200K - 4000K tunable |
| No. of LED's | Fixed CT 182 LED/m or tunable 196 LED/m |
| CRI | 97CRI |
| Lumen Output | Fixed CT 950lm/m or tunable 1100lm/m |
| Track Supply Voltage (CV) | 24V DC |
| Material | Aluminium |
| Finishes | Black or silver anodised |
| Accessories | Removable rotating cowl |
| Beam Angles | 100° without cowl, 70° with cowl |
| Power Consumption | Fixed CT 14.4W/m or tunable 12W/m |
| Available Standard Lengths (Leg centres) | Up to 1134.5mm in 38.5mm increments or up to 1089mm in 71.4mm increments with tunable tape option. Longer lengths available to custom order. |
| Standard Maximum Lit Length | 39.4mm less than overall length<br>Plug & play max 1678.6mm with power in at both ends (839.3mm with power in at one end) |
| Height | 250mm as standard with custom heights up to 500mm on order |

## GANTRY DRIVER OPTIONS

| | |
|---|---|
| 24V Driver Options | Standard with no dimming control<br>Manual dimming<br>Casambi Bluetooth dimming<br>Eulum Xicato enabled Bluetooth<br>Dali dimming<br>DMX dimming<br>010V dimming |

## MOUNTING OPTIONS

| Surface Mount Feet | Slimline Back Nut | Plug & Play with Blanking Cap |
|---|---|---|

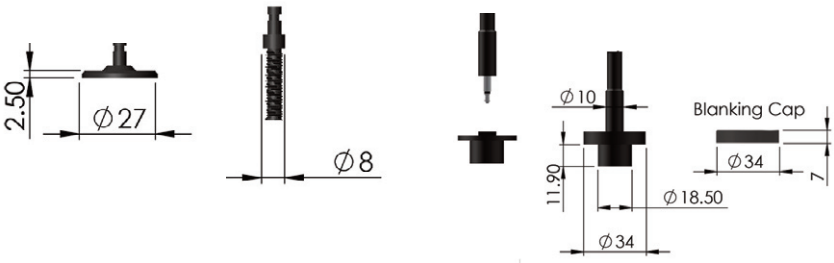

# PRODUCT SPECIFICATION SHEET

*Apollo - Linear Wand System*

The Apollo Linear Wand is great for concealment and effortless mounting of the lighting system it-self. As with the gantry system, the main body is only 12mm diameter and the wand is mounted using a rigid magnetic base which hold it securely in any position.

We offer a removable cowl accessory which can be attached by simply clipping around the Apollo' main body. The cowl offers anti-glare and can also be used to provide extra focus over the light. This system can also be rotated and locked in place to give directional control of the light.

Customised lengths in excess of standard maxi-mum lengths are available up to 3m subject to design. Longer gantry lengths will necessitate additional magnetic mounts or surface clips.

The lit length of the wand can be customised to any length with the use of blanking infill.

## TECHNICAL INFORMATION

| | |
|---|---|
| Color Temperatures | 2700K, 3000K, 4000K fixed or 2200K - 4000K tunable |
| No. of LED's | Fixed CT 182 LED/m or tunable 196LED/m |
| CRI | 97CRI |
| Lumen Output | Fixed CT 950lm/m or tunable 1100lm/m |
| Track Supply Voltage (CV) | 24V DC |
| Material | Aluminum |
| Finishes | Black or silver anodised |
| Accessories | Removable rotating cowl<br>Surface mount clips |
| Beam Angles | 100° without cowl, 70° with cowl |
| Power Consumption | Fixed CT 14.4W/m or tunable 12W/m |
| Available Standard Overall Lengths | C-Clip & magnetic feet mounting max length 1163mm<br>Standing foot max height 500mm |
| Standard Maximum Lit Length | Customisable to any length with blanking |

## LINEAR DRIVER OPTIONS

| | |
|---|---|
| 24V Driver Options | Standard with no dimming control<br>Manual dimming<br>Casambi Bluetooth dimming<br>Eulum Xicato enabled Bluetooth<br>Dali dimming<br>DMX dimming<br>010V dimming |

## APOLLO WAND MOUNTING

Screw Mounted C-Clips

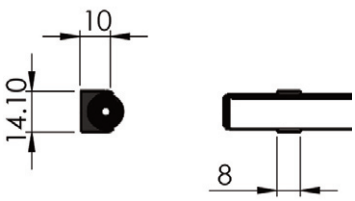


Standing Foot

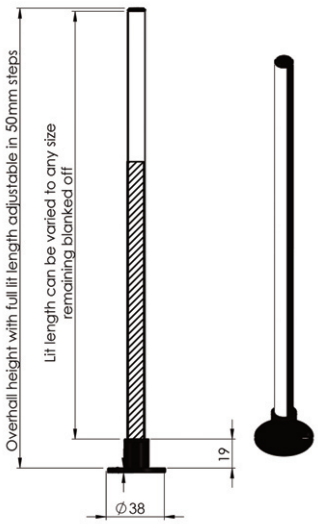


Magnetic Feet

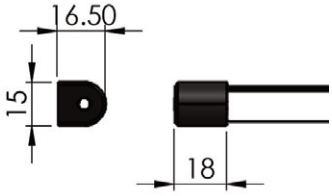

# PRODUCT SIZING INFORMATION

*Apollo LED Lighting System*

## APOLLO GANTRY - 2 LEG VARIANTS - SIZING INFORMATION

Smaller gantries can be supported by a leg at either end. Relevant dimensions are shown on the drawing opposite and described below.

Minimum Length of A = 500mm
Maximum Length of A = 1150mm

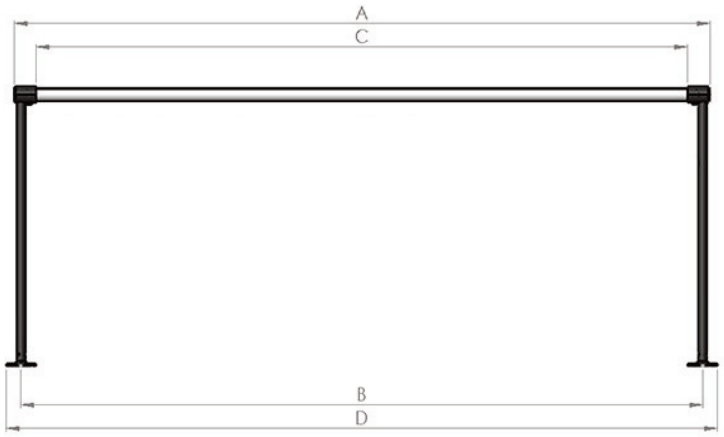


| Dimension Ref. | Description | How to Work Out |
|---|---|---|
| A | Full length of gantry | N/A |
| B | Centres of gantry legs | 13mm less than A |
| C | Max. visible lit length* | 40mm less than A |
| D | Overall Width with surface mount feet** | 14mm greater than A |

* During manufacture we will always make the illuminated area as long as possible. Depending on sizes specified though and the length of LED tape sections, it may be that the illuminated area needs to have short blacked out diffuser at either end. This will be shown on drawings sent for approval.

** The overall width if using the backnut secured feet is equal to dimension A.

## APOLLO GANTRY - 3 LEG VARIANTS - SIZING INFORMATION

Medium sized gantries are supported by a leg at either end and 1 in the centre. Relevant dimensions are shown on the drawing opposite and described below.

Minimum Length of A = 1151mm
Maximum Length of A = 2225mm

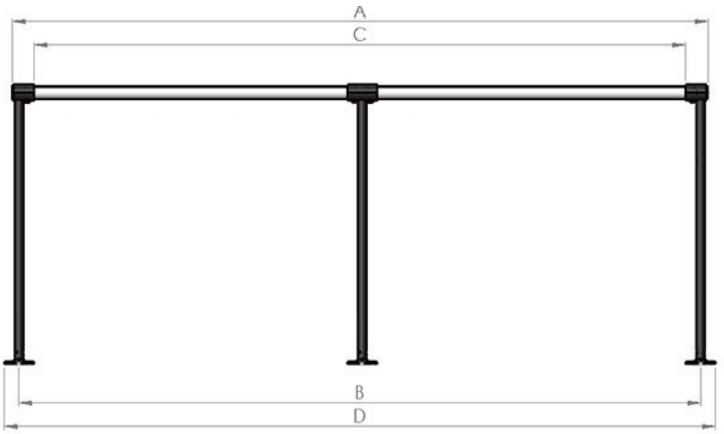


| Dimension Ref. | Description | How to Work Out |
|---|---|---|
| A | Full length of gantry | N/A |
| B | Centres of gantry legs | 13mm less than A |
| C | Max. visible lit length* | 40mm less than A |
| D | Overall Width with surface mount feet** | 14mm greater than A |

* During manufacture we will always make the illuminated area as long as possible. Depending on sizes specified though and the length of LED tape sections, it may be that the illuminated area needs to have short blacked out diffuser at either end. The visible lit length will also have a central break of 27mm where the central leg is attached. This will be shown on drawings sent for approval.

** The overall width if using the backnut secured feet is equal to dimension A.

# PRODUCT SIZING INFORMATION

*Apollo LED Lighting System*

## APOLLO GANTRY - 4 LEG VARIANTS - SIZING INFORMATION

Larger sized gantries are supported by a leg at either end and 2 more equally spaced in the centre. Relevant dimensions are shown on the drawing opposite and described below.

Minimum Length of A = 2226mm
Maximum Length of A = 2995mm

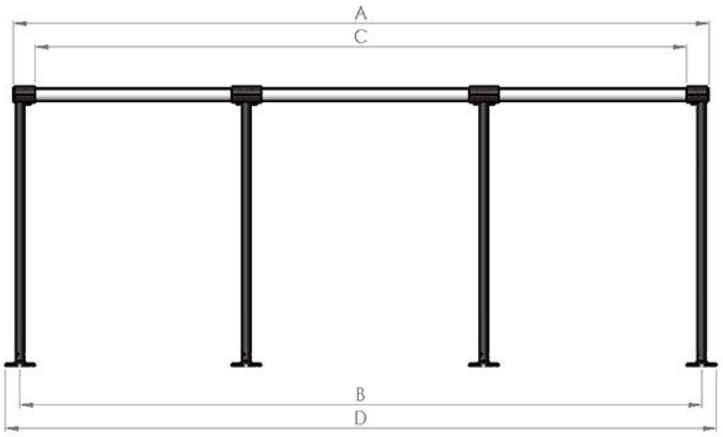


| Dimension Ref. | Description | How to Work Out |
|---|---|---|
| A | Full length of gantry | N/A |
| B | Centres of gantry legs | 13mm less than A |
| C | Max. visible lit length* | 40mm less than A |
| D | Overall Width with surface mount feet** | 14mm greater than A |

* During manufacture we will always make the illuminated area as long as possible. Depending on sizes specified though and the length of LED tape sections, it may be that the illuminated area needs to have short blacked out diffuser at either end. The visible lit length will also have a 2 breaks of 27mm where the central legs are attached. This will be shown on drawings sent for approval.

** The overall width if using the backnut secured feet is equal to dimension A.

## APOLLO LINEAR- SIZING INFORMATION

Apollo Linear Wands are secured either by a magnetic foot at either end or by a series of c-clips along the length. Relevant dimensions are shown on the drawing opposite and described below.

Minimum Length of A = 500mm
Maximum Length of A = 2995mm

| Dimension Ref. | Description | How to Work Out |
|---|---|---|
| A | Full length of fixture | N/A |
| B | Max. visible lit length when using magnetic feet* | 36mm less than A |
| C | Max. visible lit length when using c-clips* | 4mm less than A |

* During manufacture we will always make the illuminated area as long as possible. Depending on sizes specified though and the length of LED tape sections, it may be that the illuminated area needs to have short blacked out diffuser at either end. This will be shown on drawings sent for approval.

# PRODUCT SIZING INFORMATION

*Apollo LED Lighting System*

## APOLLO STALK - SIZING INFORMATION

Apollo Freestanding Stalks are secured by a 38mm diameter surface mount foot on the base. Relevant dimensions are shown on the drawing opposite and described below.

Minimum Length of A = 200mm
Maximum Length of A = 1000mm

| Dimension Ref. | Description |
|---|---|
| A | Full length of stalk |
| B | Example visible lit length |
| C | Example blacked out length |

We can manufacture stalks with any length of dimensions B & C and also fully illuminated along as much of entire length as possible if required. Please contact us to discuss your particular requirements.

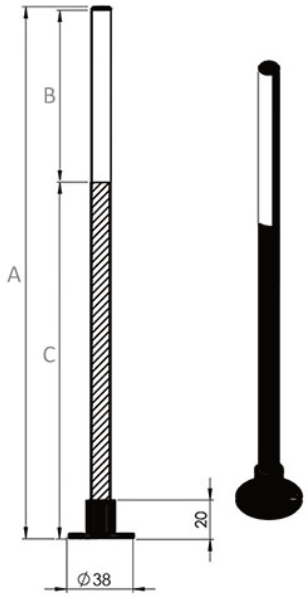

# PRODUCT ORDERING CODES

*Apollo LED Lighting System*

## APOLLO GANTRY ORDERING CODES

| MODEL | COLOR TEMP | | COLOR | | MOUNTING | | OPTIONAL COWL | | GANTRY LENGTH | GANTRY HEIGHT | DRIVER TYPE | |
|---|---|---|---|---|---|---|---|---|---|---|---|---|
| APOLLO GANTRY | 2700K | 27 | Black | BL | Surface Mount | SM | Cowl | YC | Please specify length using details on previous pages | Please state height in mm. Standard: 250mm Max: 500mm | No Control | ND |
| | 3000K | 30 | Silver | SV | Back Nut | NUT | No Cowl | NC | | | Manual Dimming | MD |
| | 4000K | 40 | | | Plug & Play | PP | | | | | Casambi BT Dimming | CBD |
| | Tunable | TU | | | | | | | | | Xicato BT Dimming | XBD |
| | | | | | | | | | | | Dali Dimming | DD |
| | | | | | | | | | | | DMX Dimming | DMX |
| | | | | | | | | | | | 0-10V Dimming | 0-10 |
| UFO APG | | | | | | | | | | | | |

## APOLLO LINEAR ORDERING CODES

| MODEL | COLOR TEMP | | COLOR | | MOUNTING | | OPTIONAL COWL | | LENGTH | DRIVER TYPE | |
|---|---|---|---|---|---|---|---|---|---|---|---|
| APOLLO LINEAR | 2700K | 27 | Black | BL | Magnetic Mount | MG | Cowl | YC | Please specify length using details on previous pages | No Control | ND |
| | 3000K | 30 | Silver | SV | Surface Clip | SC | No Cowl | NC | | Manual Dimming | MD |
| | 4000K | 40 | | | Standing Foot | SM | | | | Casambi BT Dimming | CBD |
| | Tunable | TU | | | | | | | | Xicato BT Dimming | XBD |
| | | | | | | | | | | Dali Dimming | DD |
| | | | | | | | | | | DMX Dimming | DMX |
| | | | | | | | | | | 0-10V Dimming | 0-10 |
| UFO APL | | | | | | | | | | | |

# PRODUCT ORDERING CODES

*Apollo LED Lighting System*

## APOLLO FREESTANDING ORDERING CODES

| MODEL | COLOR TEMP | | COLOR | | FULL LENGTH | BLACKOUT LENGTH | LIT LENGTH | DRIVER TYPE | |
|---|---|---|---|---|---|---|---|---|---|
| APOLLO FREESTANDING | 2700K | 27 | Black | BL | Please specify length using details on previous pages | Please specify length in mm | Please specify length in mm | No Control | ND |
| | 3000K | 30 | Silver | SV | | | | Manual Dimming | MD |
| | 4000K | 40 | | | | | | Casambi BT Dimming | CBD |
| | Tunable | TU | | | | | | Xicato BT Dimming | XBD |
| | | | | | | | | Dali Dimming | DD |
| | | | | | | | | DMX Dimming | DMX |
| | | | | | | | | 0-10V Dimming | 0-10 |
| UFO APFR | | | | | | | | | |

Universal Fibre Optics Ltd
Home Place \ Coldstream
TD12 4DT \ UK
+44 (0)1890 883416 \ www.ufo.lighting

Universal Fiber Optic Lighting USA, LLC
1749 Northgate Blvd
Sarasota \ FL34234 \ USA
941-343-8115 \ www.fiberopticlighting.com

UFO Licht GmbH
Andreasstraße 20
93059 Regensburg \ Deutschland
+49 (0)9491 955880 \ www.ufo-licht.de